Waldorf **Bold**

Electric Tilting Bratt Pan **1200mm**

BPLB8120E, BPLB8120EE

BPLB8120EE

- 120L full stainless steel pan
- Manually operated tilting mechanism
- Optional electric power tilting mechanism
- Heavy-duty lid and hinge system
- Galvanized steel chassis
- Stainless steel exterior
- Black vitreous enamel finish to front panels
- Easy clean
- Easy service
- Fully modular

OVERALL CONSTRUCTION

- Heavy-duty galvanized steel chassis
- Splashback and side panels 1.2mm 304 stainless steel
- Front panels 0.9mm 304 stainless steel
- Full stainless steel pan with 2.0mm pan body
- 12mm thick stainless steel even heat pan base
- Large capacity pouring spout
- Heavy-duty spring balanced lid hinge system
- 1.5mm 304 stainless steel lid suitable as bench-top workspace
- Full width stainless steel lid handle
- Manually operated pan lift handwheel with fold-away handle
- Electrically powered pan tilting option
- 63mm dia. heavy-duty stainless steel legs with adjustable feet

CONTROLS

- Large easy use control knobs - heat resistant reinforced
- Easy view control settings on knobs
- Indicator lights for power and heating
- Quarter turn water valve control for ease of use
- 50-320°C thermostatic control
- Over temperature safety cut-out
- Fold away handle on manual pan tilt
- Pan up and down switches on electric pan tilt

CLEANING AND SERVICING

- Seamless full stainless steel pan with rounded corners
- Easy clean stainless steel exterior panels
- Easy connection access via front service panels
- Service friendly lid hinge system
- Access to all parts from front of unit

Series Options

BPLB - Low back models
BPB - 215mm splashback option

Waldorf Bold

Electric Tilting Bratt Pan 1200mm

BPLB8120E

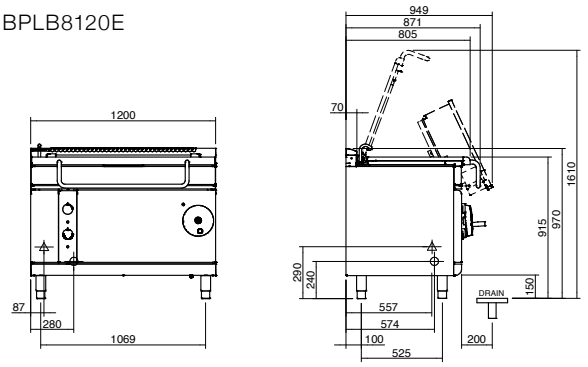

BPLB8120EE

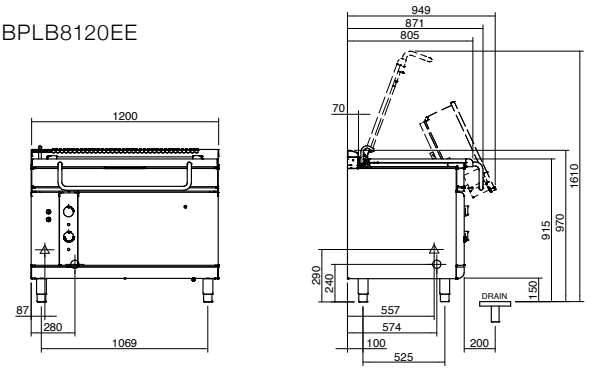

PLAN

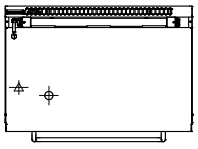

= ELECTRICAL CONNECTION POINT.
= WATER CONNECTION POINT.

SPECIFICATIONS

Elements
3 x 5.66kw stainless steel sheathed heating elements clad to pan base

Electrical requirements
17kW
400-415Vac, 50/60Hz, 3P+N+E

Phase loading
L1 23A
L2 23A
L3 23A

Pan
Cooking surface 1080mm x 450mm, 4860cm2, 215mm deep

Water connection
Cold water connection 270mm from side, 574mm from rear, and 252mm from floor
½" tube connection via 15mm crox fitting
550kpa, 80psi max water pressure

Electrical connection
60mm from LH side, 405mm from rear, and 150mm from floor

Dimensions
Width 1200mm
Depth 805mm
Height 915mm
Incl. low back 970mm
Incl. splashback option 1130mm
With lid open 1600mm

Nett weight
220kg

Packing data
1.36m3, 300kg
Width 1245mm
Depth 870mm
Height 1255mm

OPTIONS AT EXTRA COST

Joining caps
Plinth mounting

moffat.com.au
moffat.co.nz

Australia
moffat.com.au

Moffat Pty Limited

Victoria/Tasmania
740 Springvale Road
Mulgrave, Victoria 3170
Telephone +613-9518 3888
Facsimile +613-9518 3833
vsales@moffat.com.au

New South Wales
Telephone +612-8833 4111
nswsales@moffat.com.au

South Australia
Telephone -613-9518 3888
vsales@moffat.com.au

Queensland
Telephone +617-3630 8600
qldsales@moffat.com.au

Western Australia
Telephone 618-9413 2400
wasales@moffat.com.au

New Zealand
moffat.co.nz

Moffat Limited

Rolleston
45 Illinois Drive
Izone Business Hub
Rolleston 7675
Telephone +64 3-983 6600
Facsimile +64 3-983 6660
sales@moffat.co.nz

Auckland
Telephone +64 9-574 3150
sales@moffat.co.nz

24:7 Service Support

ISO9001
Quality Management Standard

Designed and manufactured by

ISO9001
All Waldorf Bold products are designed and manufactured by Moffat using the internationally recognised ISO9001 quality management system, covering design, manufacture and final inspection, ensuring consistent high quality at all times.

In line with policy to continually develop and improve its products, Moffat Limited reserves the right to change specifications and design without notice.

© Copyright Moffat Ltd

AN.WBD.S.02.19

an Ali Group Company

The Spirit of Excellence