WARRANTY 3 YEARS PARTS & LABOUR

NATIONWIDE 24/7 SERVICE 365 DAYS

Turbo air

UNDER COUNTER SOLID DOOR

FREEZER

MODEL : KUF9-1-N / KUF9-1(HC)
KUF9-1S-N / KUF9-1(600)(HC)

NATURAL Refrigerant

Front Breathing

FEATURES / BENEFITS

Digital temperature control & monitor system

Keep foodproducts safe by maintainingconstanttemperatures.External digital display allows for easy monitoring.

Hydrocarbon(HC) refrigerants (R-290)

Withinnovative and eco-friendlytechnology, Turbo Air brings you hydrocarbon refrigerators designed to meet DOE's Energy Conservation Standards in 2017 and to use EPA's SNAP Program approved HC refrigerants. Hydrocarbon refrigerants do not deplete the ozone layer andhave very low affect to globalwarming (ODP-0, GWP-3).

Side mount compressor unit

With compressors positioned on the side of the unit, our refrigerators can now be serviced without being moved. Our innovative, front breathing feature alsoallows this model to be highly efficient in narrow spaces.

Exterior & interior of the cabinet

The Turbo Air K-s eriesboasts a stainless steelexterior (galvanized steel back and bottom). Interior is stainless steel floor with AL sides, back and AL door liners. It guarantees the utmost in cleanliness and long product life. The K- series addsa touch of style to themostrefined setting.

High-density polyurethane insulation

The entirecabinet structureandsolid doorsare foamed-in-place using high density,CFC freepolyurethane insulation.

Hot gas condensate system

Through TurboAir's creative innovation, the condensate system surfaces have been specially treated to resist corrosion. This not only increases efficiency without the risk of refrigerant leakage from corrosion, but also thoroughly prevents the overflowof condensate water.

Ergonomically designed doors

Customers' fatigue fades away witheasygrip handles and doors that open effortlessly. These features along with self-closing doors make this theultimate choice incustomer convenience.

Adjustable, heavy duty, PE (polyethylene) coated wire shelves

Easy open front grille with condenser cleaning brush kit

Frontgrille cover is easily removable without any tools, which makes condenser cleaning easy and convenient at any time. Handy condenser cleaningbrushis included insidethe front grille cover.

Refrigerator holds 1°C ~ 8°C for the best in food preservation

Available in 700mm as standard and slim 600mm deep

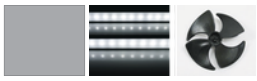

LED interior lighting & fan control (only at Turbo Air)

Energy efficient LEDlighting lights every corner, making items easy to find. Fan control function automatically shuts off the fan when the door is open, which prevents hot air from being drawn in, thus maintaining the cool inner temperature.

Standard features

- Anti-corrosion coatedevaporator
- Self-contained system
- Standard 125mm. swivel castors with locks on the front set
- Door locks standard

Optional features

- 125mm castors fitted
- 180mm,105mm, 80mm castors optional
- Adjustable legs 100-155mm

REFRIGERATOR MANUFACTURER Turbo air

■ **WARRANTY: 3 Year Parts and Labour Warranty**

UNDER COUNTER SOLID DOOR

FREEZER
MODEL : KUF9-1-N / KUF9-1(HC)
KUF9-1S-N / KUF9-1(600)(HC)

Model	KUF9-1-N(HC)	KUF9-1S-N(600)(HC)
Refrigerant	R-290	R-290
POWER INPUT(W)	400	400
COMP (HP)	2/5HP	1/3HP
Energy consumption KW/24H	2.69	2.6
AMPS(A)	2.5	2.5
Capacity (ℓ)	198	149
Product Dimension W (mm)	900	900
Product Dimension D (mm)	700	600
Product Dimension H (mm)	860	860
Weight (Kg)	72	61
Stainless steel	SUS 439	SUS 439
Applied castors	125mm	125mm
Max GN Pan depth	N/A	N/A
GN Pan	N/A	N/A
Door lock	yes	yes
Adjustable Shelves	1	1
LED light	Yes	Yes
Temperature range	-21°C~-12°C	-21°C~-12°C
Ambient temperature	35°C	35°C
Drainage / Forced Evaporation Type	Sop paper	Sop paper
Temperature control type	Digital control	Digital control
Cooling type	FAN COOLING	FAN COOLING
Glass Type (Low-e / Heater / How many layer of the glass)	N/A	N/A
Features	Easy filter cover Energy efficient	Easy filter cover Energy efficient
Design and specifications subject to change without notice. Actual Shipping weight may differ due to extra packing materials for product protection.		

PLAN VIEW

(unit : mm)

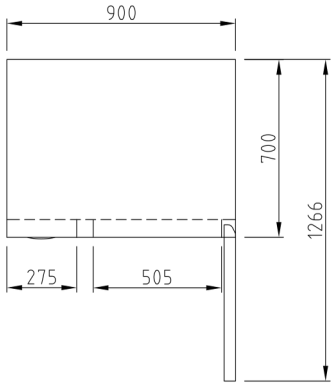

TOP VIEW

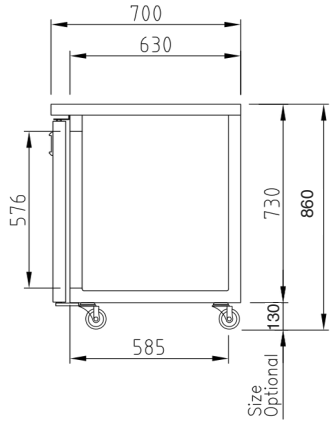

SIDE VIEW
(Depth 700mm)

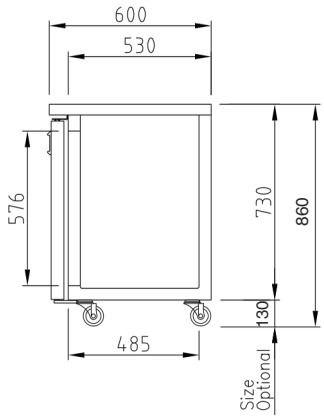

SIDE VIEW
(Depth 600mm)

WARRANTY 3 YEARS PARTS & LABOUR

NATIONWIDE 24/7 SERVICE 365 DAYS

Turbo air

AUSTRALIA BRANCH

TURBO AIR PTY LTD
www.turboairinc.com.au
1st Floor, Building E
10 Highgate St, Auburn
NSW 2144 Australia
T.02 9737 9881