WARRANTY 3 YEARS PARTS & LABOUR

NATIONWIDE 24/7 SERVICE 365 DAYS

Turbo air

UNDER COUNTER DRAWER

REFRIGERATOR

KUR12-3D-6-N / KUR12-3D-6(HC)

FEATURES / BENEFITS

NATURAL Refrigerant **Front Breathing**

Digital temperature control & monitor system
Keep foodproducts safe by maintainingconstanttemperatures.External digital display allows for easy monitoring.

Hydrocarbon(HC) refrigerants (R-290)
Withinnovative and eco-friendlytechnology, Turbo Air brings you hydrocarbon refrigerators designed to meet DOE's Energy Conservation Standards in 2017 and to use EPA's SNAP Program approved HC refrigerants. Hydrocarbon refrigerants do not deplete the ozone layer andhave very low affect to globalwarming (ODP-0, GWP-3).

Side mount compressor unit
With compressors positioned on the side of the unit, our refrigerators can now be serviced without being moved. Our innovative, front breathing feature alsoallows this model to be highly efficient in narrow spaces.

Exterior & interior of the cabinet
The Turbo Air K-s eriesboasts a stainless steelexterior (galvanized steel back and bottom). Interior is stainless steel floor with AL sides, back and AL door liners. It guarantees the utmost in cleanliness and long product life. The K- series addsa touch of style to themostrefined setting.

High-density polyurethane insulation
The entirecabinet structureandsolid doorsare foamed-in-place using high density,CFC freepolyurethane insulation.

Hot gas condensate system
Through TurboAir's creative innovation, the condensate system surfaces have been specially treated to resist corrosion. This not only increases efficiency without the risk of refrigerant leakage from corrosion, but also thoroughly prevents the overflowof condensate water.

Ergonomically designed doors
Customers' fatigue fades away witheasygrip handles and doors that open effortlessly. These features along with self-closing doors make this theultimate choice incustomer convenience.

Adjustable, heavy duty, PE (polyethylene) coated wire shelves

Easy open front grille with condenser cleaning brush kit
Frontgrille cover is easily removable without any tools, which makes condenser cleaning easy and convenient at any time. Handy condenser cleaningbrushis included insidethe front grille cover.

Refrigerator holds 1°C ~ 8°C for the best in food preservation

Meat Function
The Meat function allows thecompressorto runcontinuously for up to 2 hours. When activated, the temperature drops quickly. This is ideal when you put new stock and need to chill/ freeze it quickly. Also for aging meat and fish to an ideal temperature.

-GN PANS NOT INCLUDED

Fan control
Fan control function automatically shuts off the fan when the door is open, which prevents hot air from being drawn in, thus maintaining the cool inner temperature.

Standard features
- Anti-corrosion coatedevaporator
- Self-contained system
- Standard 125mm. swivel castors with locks on the front set
- Doorlocks standard

Optional features
- 125 mm castors fitted
- 180mm,105mm, 80mm castors optional
- Adjustable legs 100-155mm

REFRIGERATOR MANUFACTURER Turbo air ■ **WARRANTY: 3 Year Parts and Labour Warranty**

UNDER COUNTER DRAWER

REFRIGERATOR
KUR12-3D-6-N / KUR12-3D-6(HC)

Model	KUR12-3D-6-N(HC)
Refrigerant	R-290
POWER INPUT(W)	280
COMP (HP)	1/4HP
Energy consumption KW/24H	1.47
AMPS(A)	1.4
Capacity (ℓ)	311
Product Dimension W (mm)	1200
Product Dimension D (mm)	700
Product Dimension H (mm)	860
Weight (Kg)	97
Stainless steel	SUS 439
Applied castors	125mm
Max GN Pan depth	100mm
GN Pan	Not included
Door lock	no
Adjustable Shelves	0
LED light	No
Temperature range	1°C~8°C
Ambient temperature	35°C
Drainage / Forced Evaporation Type	Sop paper
Temperature control type	Digital control
Cooling type	FAN COOLING
Glass Type (Low-e / Heater / How many layer of the glass)	N/A
Features	Easy filter cover Energy efficient

PLAN VIEW

(unit : mm)

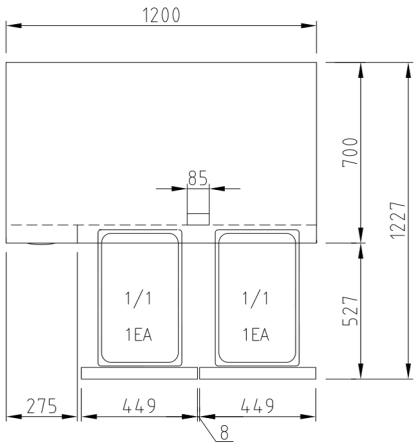

PLAN VIEW

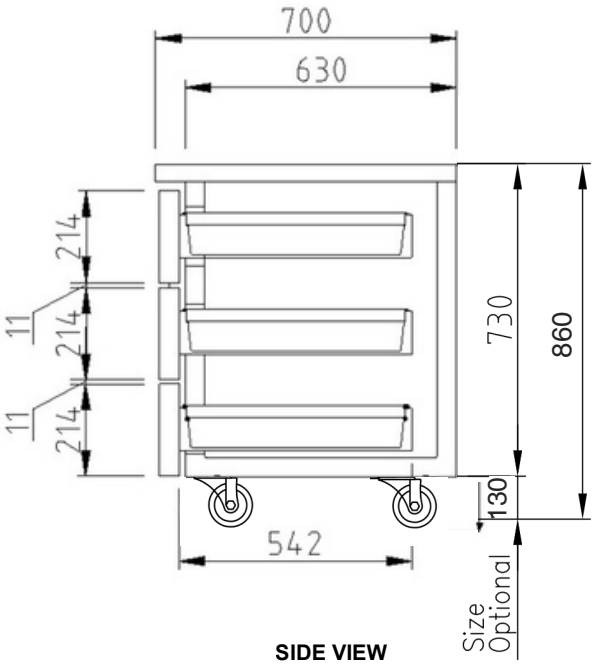

SIDE VIEW

WARRANTY 3 YEARS PARTS & LABOUR

NATIONWIDE 24/7 SERVICE 365 DAYS

Turbo air

AUSTRALIA BRANCH

TURBO AIR PTY LTD
www.turboairinc.com.au
1st Floor, Building E
10 Highgate St, Auburn
NSW 2144 Australia
T.02 9737 9881